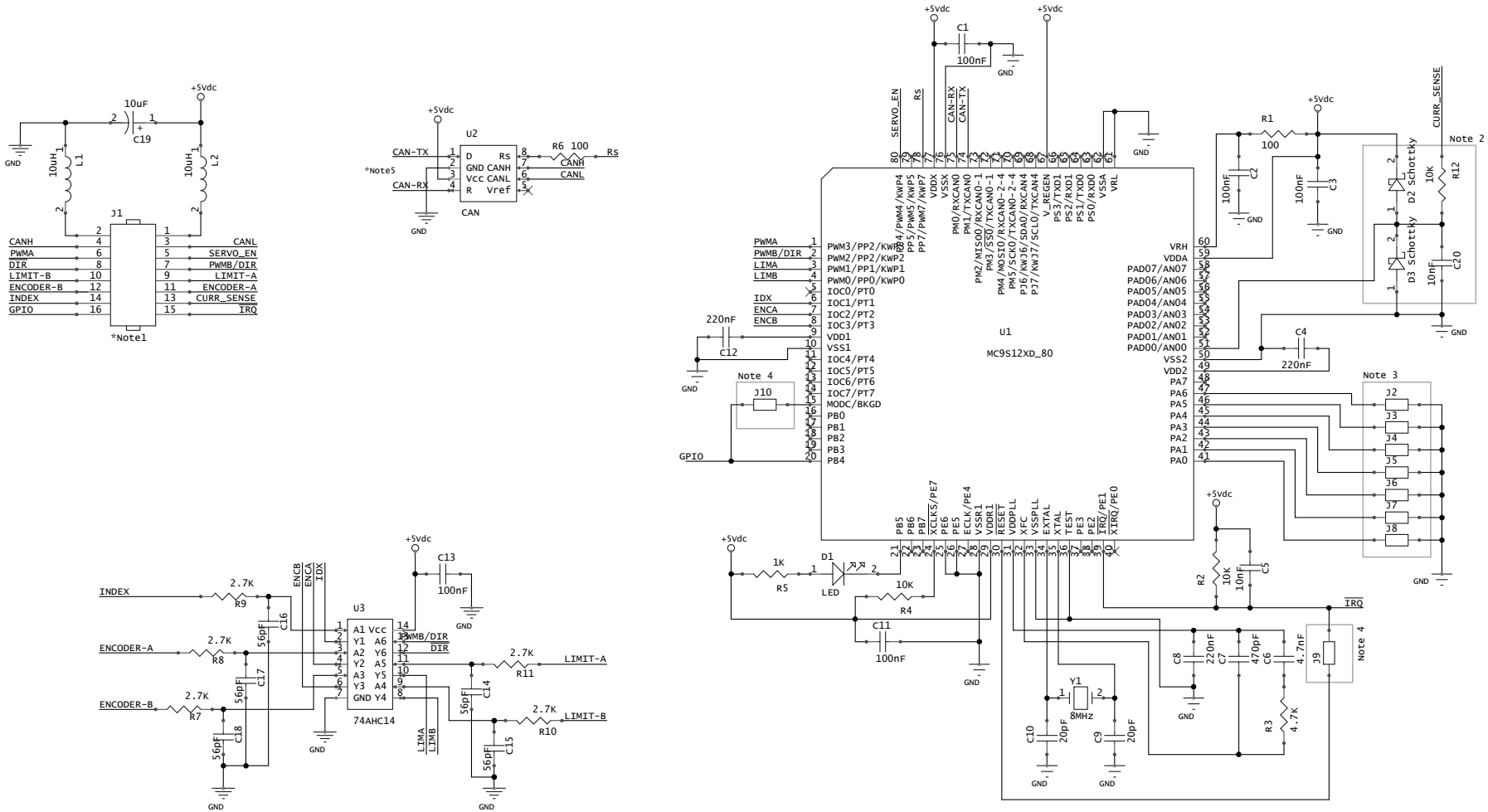

Note 1: H-bridge control lines (PWMA, PWMB, $\overline{\text{DIR}}$, SERVO_EN) may require external pull resistors to prevent motor activation before mcu initialization.
LIMIT-A and LIMIT-B lines must have an external pull resistor installed to determine polarity (+5V or GND).

Note 2: Optional ATD signal conditioning - not populated. Cut trace between resistor pads.

Note 3: Servo address - populate solder jumpers uniquely per network (zero is an invalid address).

Note 4: Do not populate

Note 5: Optional CAN bus terminator (120 ohm resistor) is an external component.

H1 Hole H2 Hole

Vera Ikona		
Title: Fuzzy Logic Servo Controller		
Project:	File:	Page:1/1
Number:	Date: 28 Feb 2012	Rev.:1.1